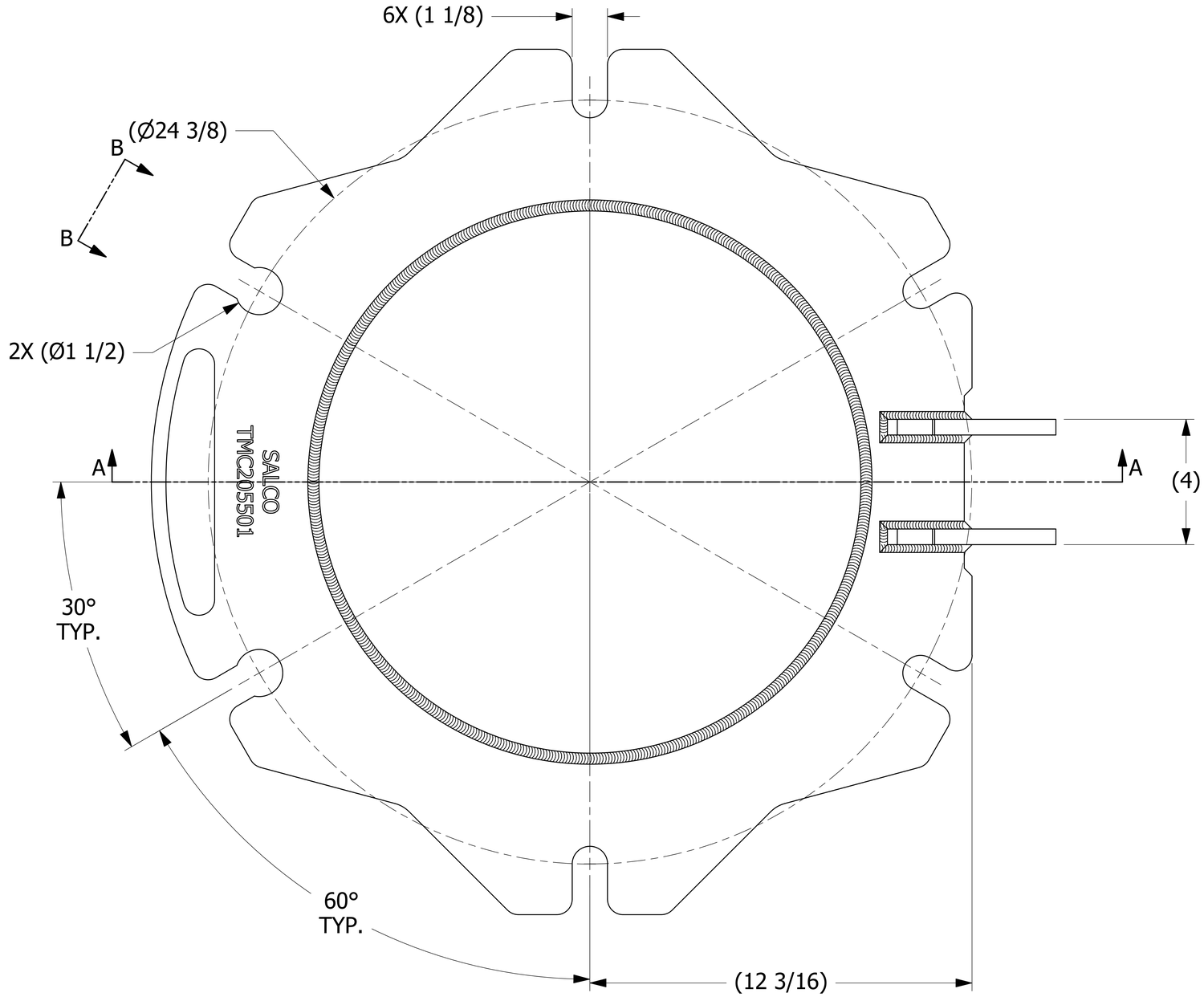

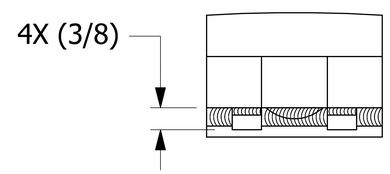

VIEW B-B
SCALE 1 : 1

NOTE:
AAR APPROVAL # E-182114.

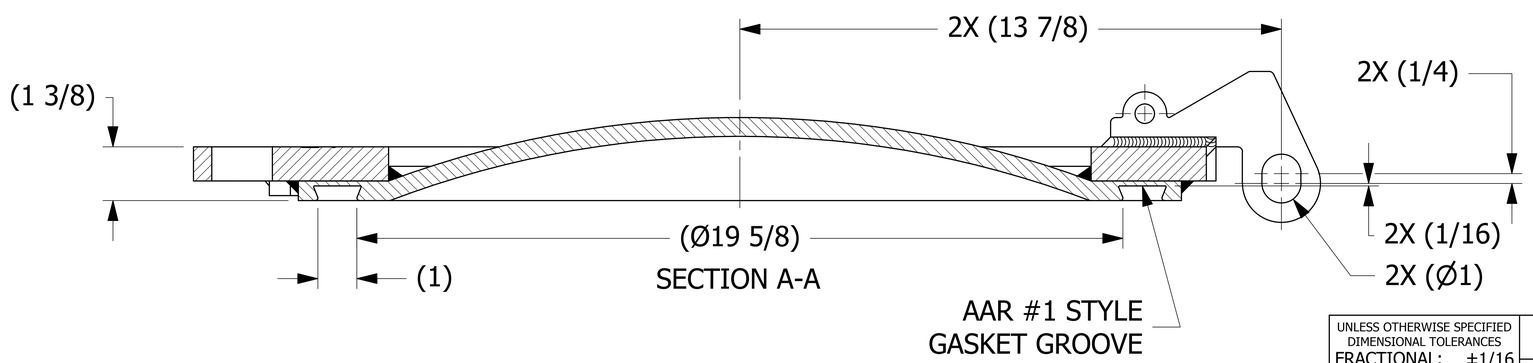

SECTION A-A

REV	BY	DATE	DESCRIPTION
E	WEB	4-4-19	REMOVED QAP4A-1 NOTE; Q-2.15.7 WAS QAP4C-1; D-008 WAS DSS 12; ADDED D-005 NOTE; AAR # WAS E-089005
D	RJP	11-17-17	HINGE WELD WAS 3/8"; 4.00 +.00/-.06 WAS 4.00; ADDED 2X (1/4) & NOTE 6; ADDED "SALCO" TO ENGRAVING
C	JG	4-13-17	TMCDR205501 WAS TMCR205C2 & TMCDSC1MF; C45045 WAS TMCHS4AH2; A28439 WAS A14392; UPDATED NOTES, DIMS, VIEWS
B	WEB	9-25-12	ADDED TOLERANCE RANGE 7/16-5/16 TOUNDERSIDE DOME WELD, AND ADDED VIEW D-D
A	GDS	8-7-12	PART ADDED TO NETWORK

UNLESS OTHERWISE SPECIFIED
DIMENSIONAL TOLERANCES
FRACTIONAL: ±1/16
X.XX: ±.03
X.XXX: ±.015
ANGULAR: ±1°
DEBURR ALL SHARP EDGES.
ALL MACHINED SURFACES TO HAVE A 125 RMS FINISH UNLESS NOTED OTHERWISE.
THIRD ANGLE PROJECTION

DRAWN BY:	GDS
CHECKED BY:	CHL
PROTOTYPE BY:	GDS
PROTOTYPE DATE:	7/24/2012
APPROVED FOR PRODUCTION BY:	CHL
PRODUCTION DATE:	8/7/2012

SALCO PRODUCTS, INC.

PART NAME: MANWAY COVER 20" 6-BOLT

MATERIAL: CARBON STEEL

PROJECT #: 120608 | SHEET #: 1 OF 1 | SCALE: 2:3

DRAWING #: E33798 | PART #: TMC205501

THIS PRINT, PROPERTY OF SALCO PRODUCTS INC, CONTAINS PROPRIETARY INFORMATION AND MUST NOT BE COPIED, REPRODUCED, OR USED DETRIMENTALLY TO OUR INTEREST.

SALES DRAWING SALES DRAWING
SALES DRAWING SALES DRAWING